TAB488L22AL | LockVise™ Metal Locking Tablet Holder with 22" Seat Rail Mount

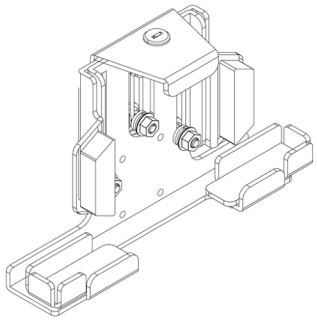

TAB004KL

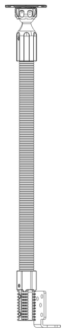

GN088AMPSL22AL

Includes:

1 – LockVise™ Metal Locking Tablet Holder Kit (TAB004KL)
1 – Seat Rail Pedestal Kit with AMPS Adapter (GN088AMPSL22AL)

Compatibility: This holder is designed to be compatible with a variety of tablets, covering popular models with width ranging from 8” to 10.25” and height from 4.37” to 7.75”.

Seat Rail Kit Hardware Specifications:
1 - Metal conduit (SPCONDUIT)
1 - Floor mounting bracket
1 - Horizontal Dual-T Slot to 4-Hole AMPS Adapter (AP015)
4 - Phillips rounded heads screws (18-8 Stainless Steel, M4.2 Screw Size 25mm Long)

1 Install the AMPS adapter plate onto the tablet holder

Detach the AMPS adapter from the seat rail pedestal by rotating the tightening ring counterclockwise to release it. Align the AMPS adapter at the rear of the tablet holder. Insert the four mounting screws through the AMPS 4-hole ball adapter plate and into the tablet holder. Firmly fasten the screws to finish the installation.

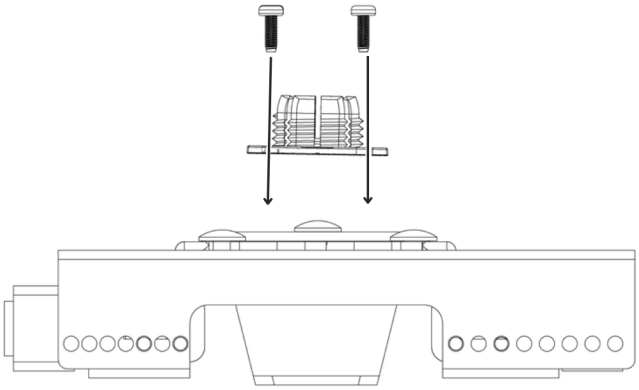

2 Assemble the components

Position the tightening ring over the 22mm ball located on the pedestal. Next, place the tablet holder with the adapter over it for attachment. Lastly, tighten the tightening ring to firmly secure the tablet holder in its position.

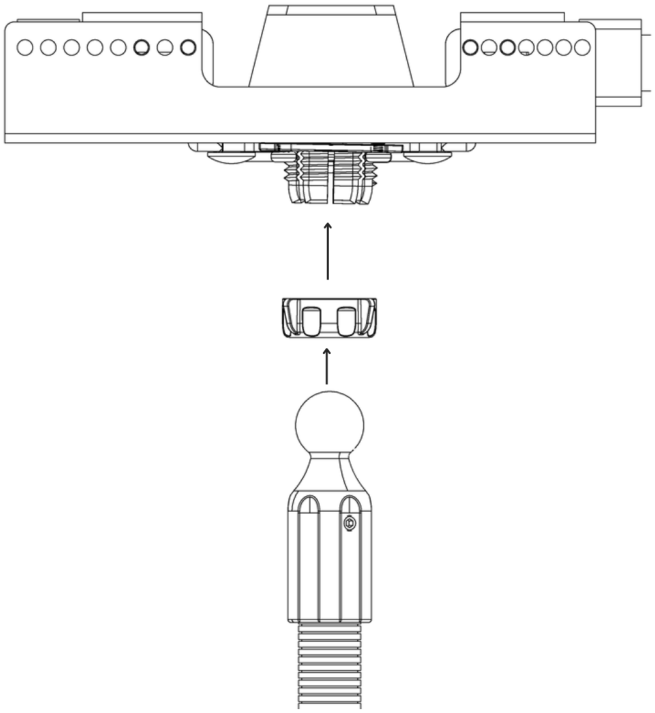

WARNING
CHOKING HAZARD - Keep out of reach from children under 8 yrs. as they can choke or suffocate on parts included with this system

WARNING
Arkon® is not responsible for any damages caused to your device or yourself due to the installation or use of this mount. Do not install Arkon® products near areas that intefere with operation of vehicles. Arkon® assumes no responsibility or liability for injury or death as a result of failure to install in a safe location. Arkon® is not responsible for any damages caused to vehicles, product, or people due to the installation or use of this product.

Continued on page 2

©Arkon Resources, Inc.

3 **Option 1 - Mounting the Passenger Seat Bolt**

Utilize a socket wrench to loosen the bolt on the passenger seat track. Then, insert the seat track bolt bracket. Finally, tighten the seat track bolt securely.

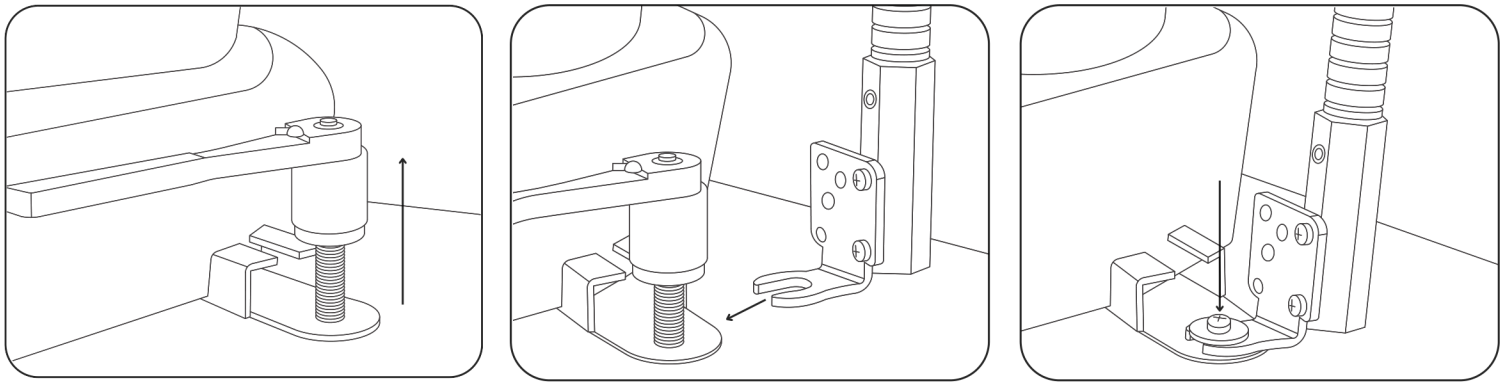

4 **Option 2 - Floor Mounting**

Fasten the floor bracket to the mount. (Adjust the bracket's orientation as needed for your vehicle). Secure the floor/console bracket in place using screws.

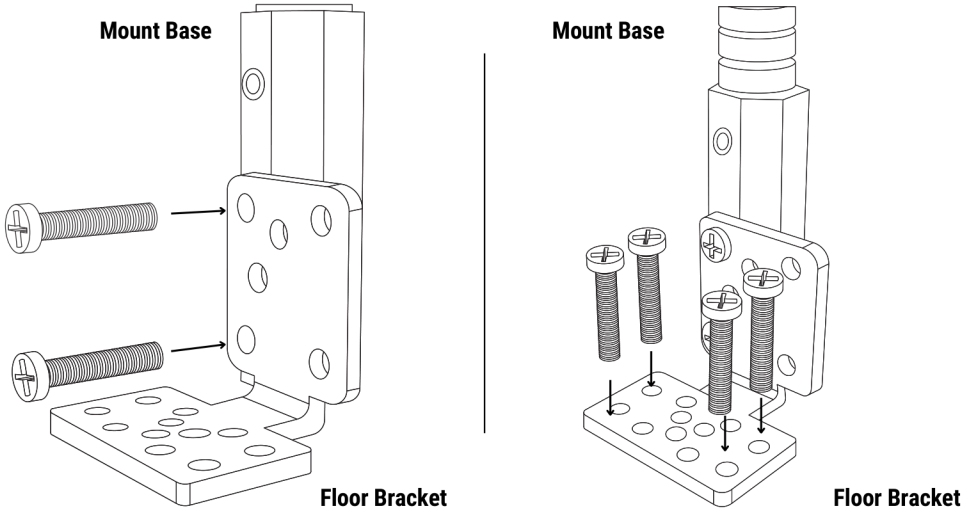

5 **Optional Step: Metal Conduit**

Connect the provided metal conduit to the console to reduce vibration.

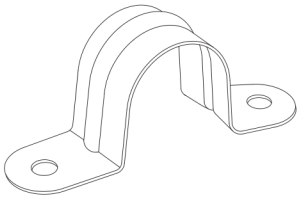

WARNING

CHOKING HAZARD - Keep out of reach from children under 8 yrs. as they can choke or suffocate on parts included with this system

WARNING

Arkon® is not responsible for any damages caused to your device or yourself due to the installation or use of this mount. Do not install Arkon® products near areas that intefere with operation of vehicles. Arkon® assumes no responsibility or liability for injury or death as a result of failure to install in a safe location. Arkon® is not responsible for any damages caused to vehicles, product, or people due to the installation or use of this product.

Continued on page 3

©Arkon Resources, Inc.

6 Modify the Tablet Holder Width

To customize the tablet holder width for your device, loosen the screws positioned at the bottom sides of the holder. After adjusting, tighten the screws to keep the tablet securely in place.

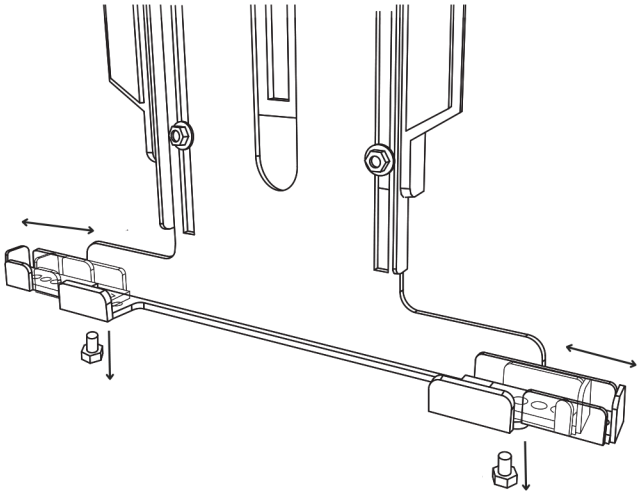

7 Adjusting the Tablet Holder Length

Unscrew the three screws/washers located at the back/center of the holder to modify the height of the tablet holder to match your tablet. Remember to retighten the screws/washers to ensure everything is securely in place.

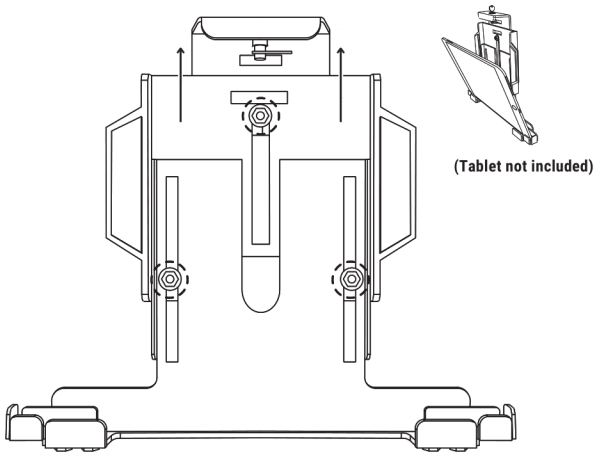

8 Securing the Tablet Holder

To secure the tablet, simply press down on the locking arm located on the top of the tablet and use the included key to lock it in place.

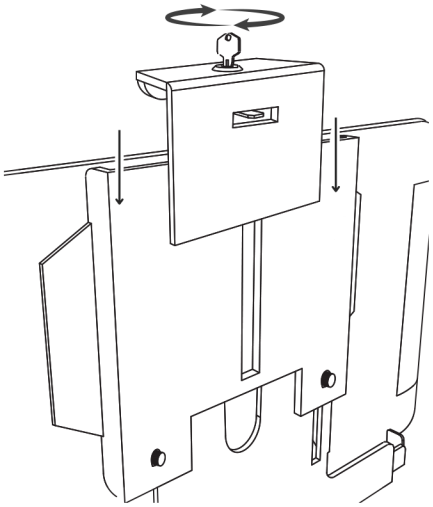

9 Optional - Installing the foam padding if not using a tablet case

To properly set up the tablet holder, apply the foam padding and place it in the sides of the holder.

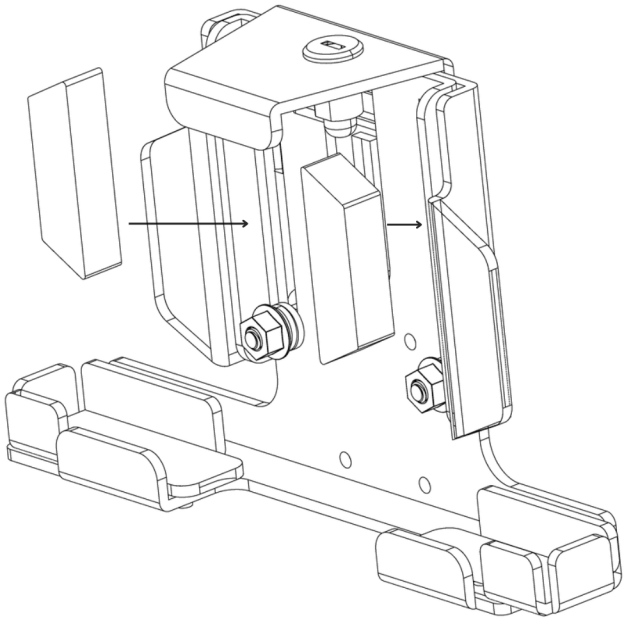

WARNING

CHOKING HAZARD - Keep out of reach from children under 8 yrs. as they can choke or suffocate on parts included with this system

WARNING

Arkon® is not responsible for any damages caused to your device or yourself due to the installation or use of this mount. Do not install Arkon® products near areas that intefere with operation of vehicles. Arkon® assumes no responsibility or liability for injury or death as a result of failure to install in a safe location. Arkon® is not responsible for any damages caused to vehicles, product, or people due to the installation or use of this product.

Continued on page 4

©Arkon Resources, Inc.

10 **Optional - Switch to Non-locking**
Take off the nut and washers from the front center of the holder that locks the position of the locking arm.

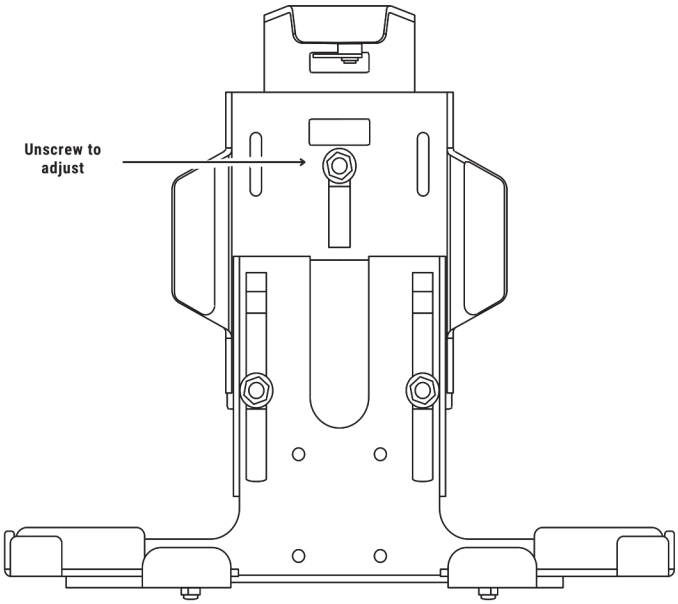

11 **Switch to Non-locking**
Pull screw out from the back of the locking arm

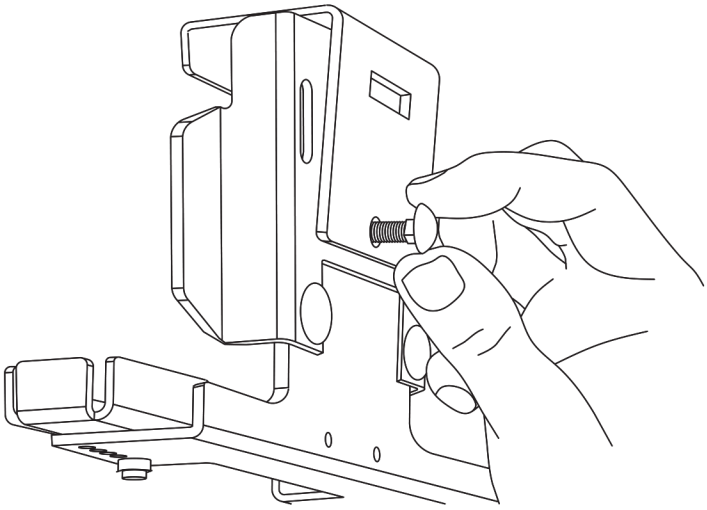

12 **Switch to Non-locking**
Re-insert screw to the front of the holder going through the locking arm

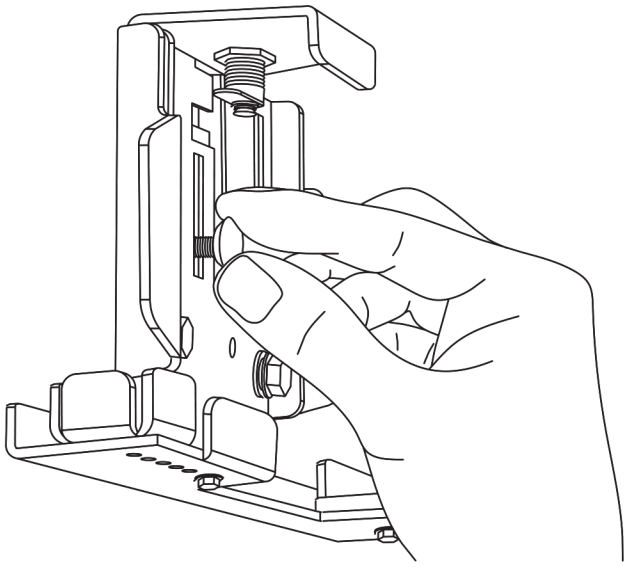

13 **Switch to Non-locking**
Attach knob to screw on the back of the holder's locking arm

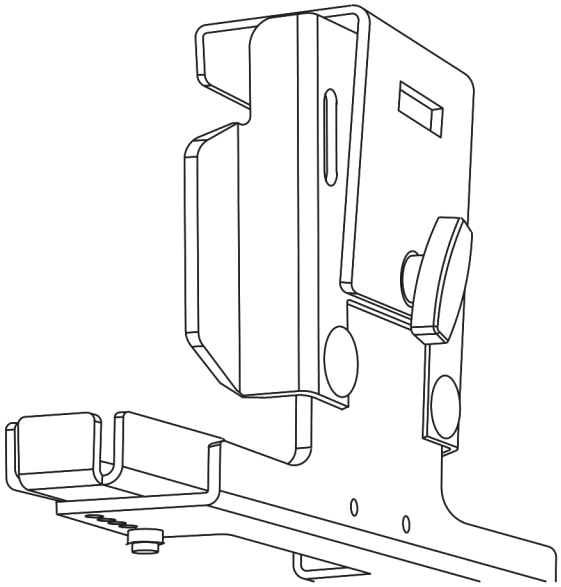

WARNING
CHOKING HAZARD - Keep out of reach from children under 8 yrs. as they can choke or suffocate on parts included with this system

WARNING
Arkon® is not responsible for any damages caused to your device or yourself due to the installation or use of this mount. Do not install Arkon® products near areas that intefere with operation of vehicles. Arkon® assumes no responsibility or liability for injury or death as a result of failure to install in a safe location. Arkon® is not responsible for any damages caused to vehicles, product, or people due to the installation or use of this product.

©Arkon Resources, Inc.