FLRM3885VESA | VESA Mounting Plate with 8.5" Shaft Arm and Overhead Mount

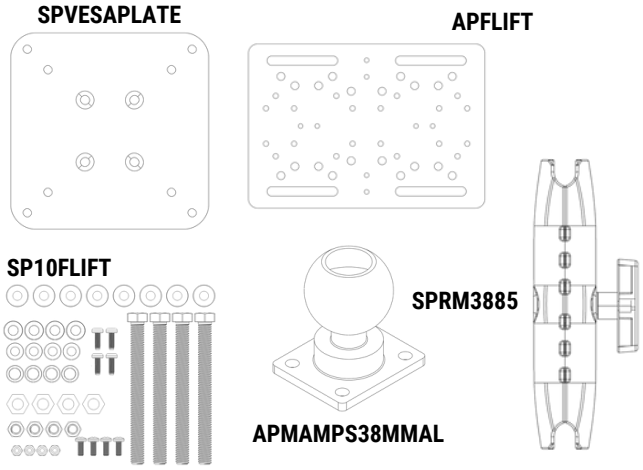

Includes:

1 – Square VESA 75 / VESA 100 Adapter Plate (SPVESAPLATE)
2 – 7”x10” Black Steel Forklift Mounting Plate (APFLIFT)
1 – Robust™ Series 8.5 inch Metal Shaft Arm (SPRM3885)
1 – Hardware Kit (S10FLIFT)
2 – XMS AMPS Adapter Plate with 38mm Ball (APMAMPS38MMAL)

Note: This mount supports VESA 75 (75mm x 75mm) and VESA 100 (100mm x 100mm) patterns. It is best suited for small televisions and desktop computer monitors weighing less than 5 pounds.

The **APFLIFT** steel plate weighs over 3 pounds and measures 10” x 7” x 1/8”. It features pre-drilled holes of sizes 4.9mm, 5.7mm, and 8.5mm, along with patterns for mounting various devices, including 4-Hole AMPS, VESA 75, VESA 100, and Gamber-Johnson 2” x 4.09”.

1 Attach the Ball Adapter to the VESA Plate

Align the AMPS adapter above the holes on the adapter plate. Use the supplied hardware to fasten the AMPS adapter securely onto the plate.

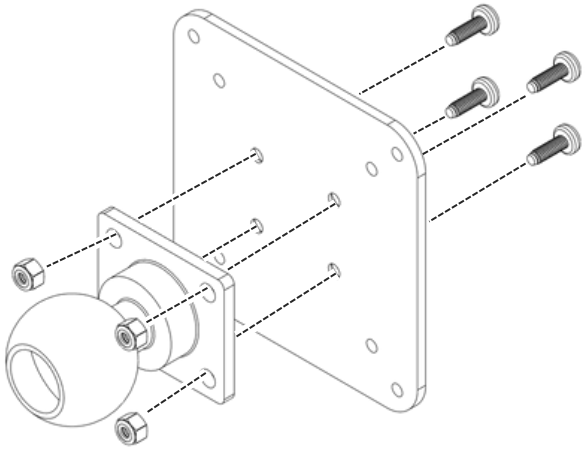

2 Attach the AMPS Adapter to the Mounting Plate

Position the AMPS plate on one of the mounting plates and secure it in place using the screws and nuts included in the hardware kit.

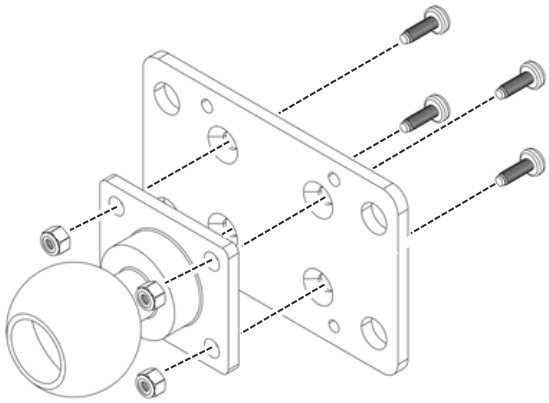

3 Mounting Plate Installation

Position the mounting plates against the designated area. Secure the plates in place while inserting the hardware.

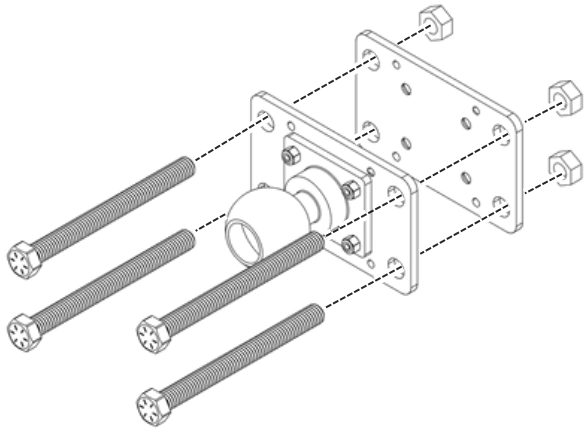

4 Assemble the components

Turn the shaft arm counterclockwise to loosen it. Next, attach the 38mm ball adapters to both ends. Finally, tighten the shaft to secure everything in place.

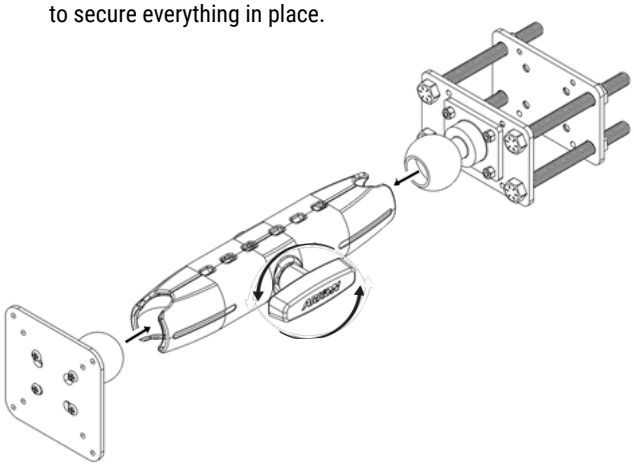

WARNING

CHOKING HAZARD - Keep out of reach from children under 8 yrs. as they can choke or suffocate on parts included with this system

WARNING

Arkon® is not responsible for any damages caused to your device or yourself due to the installation or use of this mount. Do not install Arkon® products near areas that intefere with operation of vehicles. Arkon® assumes no responsibility or liability for injury or death as a result of failure to install in a safe location. Arkon® is not responsible for any damages caused to vehicles, product, or people due to the installation or use of this product.

Continued on page 2

©Arkon Resources, Inc.

5 **Fully Assembled**

Refer to the image below for the full assembled product.

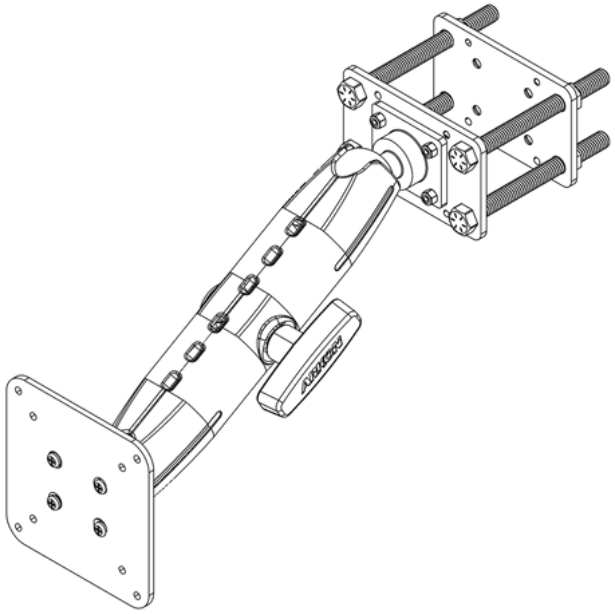

6 **Install a VESA-compatible display**

Attach this adapter to a VESA-compatible TV, monitor, or other display. We recommend, using M4 screws **(not provided)**.

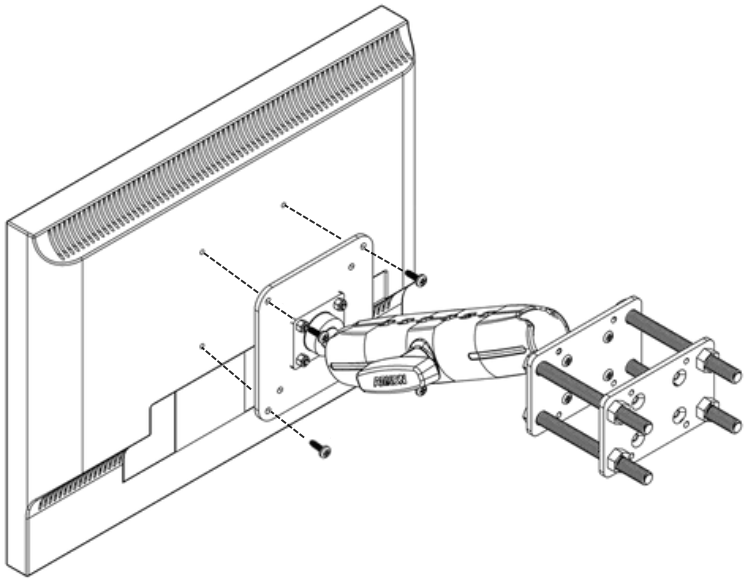

WARNING

CHOKING HAZARD - Keep out of reach from children under 8 yrs. as they can choke or suffocate on parts included with this system

WARNING

Arkon® is not responsible for any damages caused to your device or yourself due to the installation or use of this mount. Do not install Arkon® products near areas that intefere with operation of vehicles. Arkon® assumes no responsibility or liability for injury or death as a result of failure to install in a safe location. Arkon® is not responsible for any damages caused to vehicles, product, or people due to the installation or use of this product.

©Arkon Resources, Inc.