CMPHD006 | Camera Mounting Pattern with Drill-Base Mount

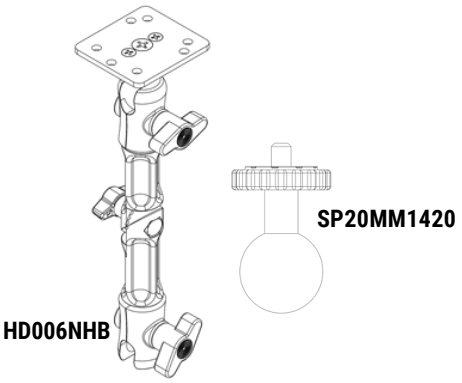

Includes:

1 – Multi-Angle Mounting Pedestal (HD006NHB)
1 – 20mm Metal Ball to 1/4"-20 Camera Adapter (SP20MM1420)

Please note the HD006NHB hardware specifications:

4 - Philips M4 coarse 22mm
4 - Philips M4 coarse 26mm
4 - M4 Drill wall anchors 26mm

1 **Assemble the camera adapter to the mounting pedestal**

Begin by loosening the knob in a counter-clockwise direction to attach the 20mm ball adapter to the mounting pedestal.

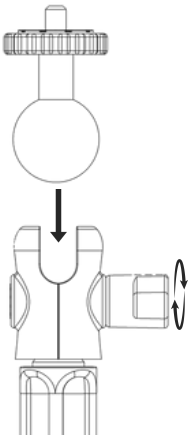

2 **Mount Installation**

Utilize the hardware included with the pedestal to securely attach it to the mounting surface. If needed, employ anchors for added stability.

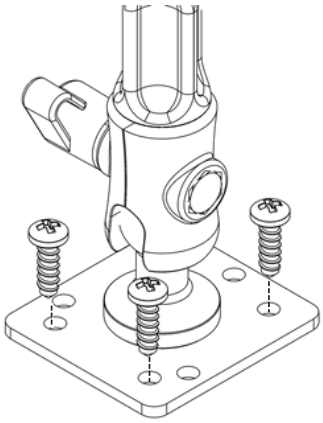

3 **To mount a camera**

Attach a camera bolt to the mounting pedestal by twisting it clockwise to secure the position.

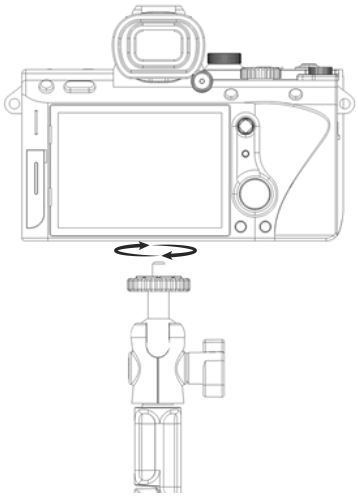

WARNING

CHOKING HAZARD - Keep out of reach from children under 8 yrs. as they can choke or suffocate on parts included with this system

WARNING

Arkon® is not responsible for any damages caused to your device or yourself due to the installation or use of this mount. Do not install Arkon® products near areas that intefere with operation of vehicles. Arkon® assumes no responsibility or liability for injury or death as a result of failure to install in a safe location. Arkon® is not responsible for any damages caused to vehicles, product, or people due to the installation or use of this product.

ARKON® MOUNTS

USA (800) 841-0884
INT'L (626) 254-9005
Monday - Friday 9 am - 5 pm PST

arkon.com
Designed in USA
©Arkon Resources, Inc.

Need assistance? Scan to email our Arkon® customer service team.